FIO4

Analogue trunk line card

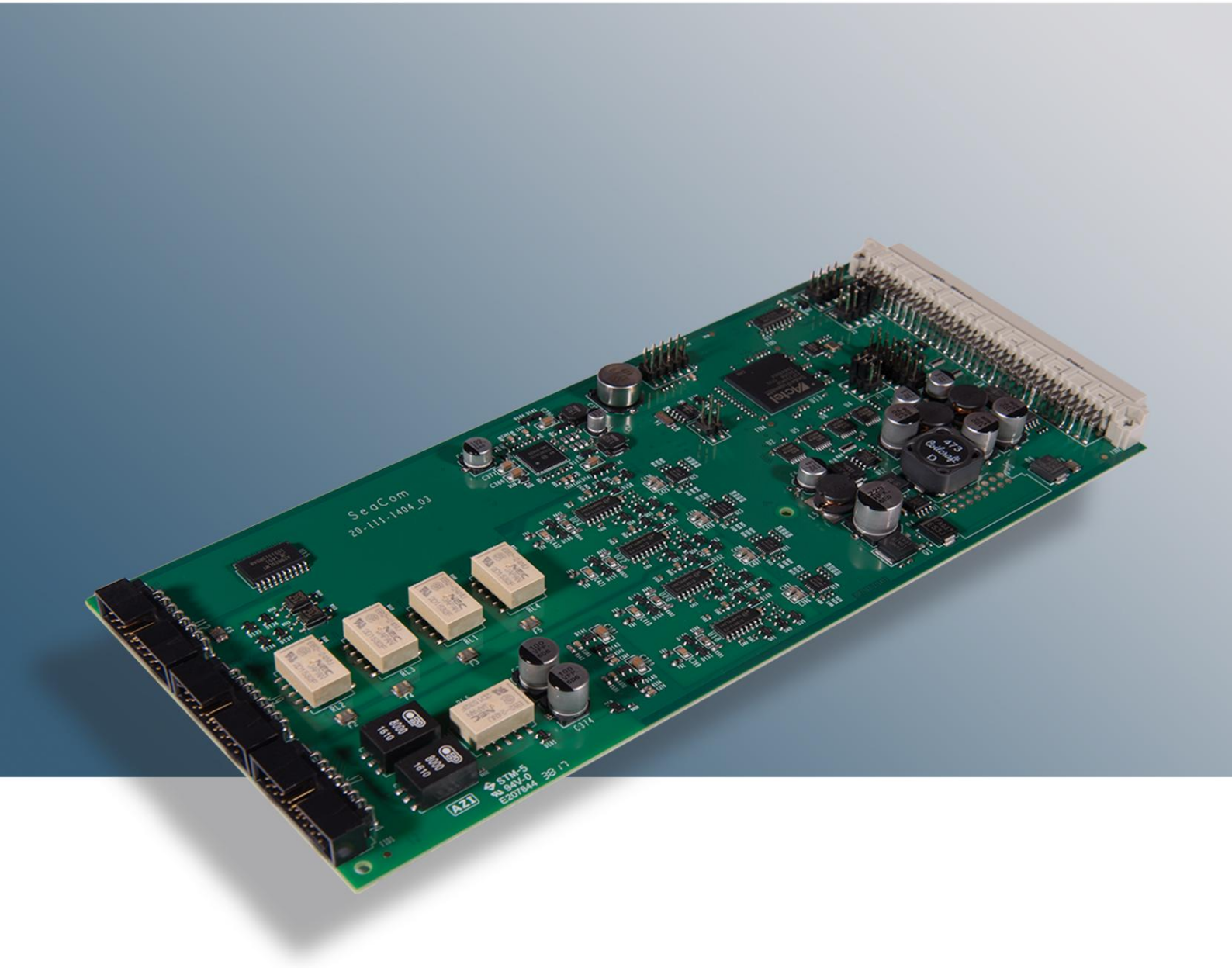

2 or 4 line trunk card used for all SeaCom exchange systems.
Includes 2 audio I/O.

SEACOM

Søren Frichs Vej 38 DK-8230 Aabyhøj Denmark www.seacom.dk telephone: +45 86 296 297

Description and use

The FIO4 and FIO4-2 are trunk line cards with respectively 4 and 2 analogue trunk lines. It is used for connecting the SeaCom systems to satellite terminals and shore lines.
Both the 2 line and the 4 line version also have 2 analogue in/out channels including relays for activating external PA amplifier systems.
The FIO4 4 line card also have a 2 additional general purpose relays, and 8 zone relay drive outputs. These are 0V idle and 24V DC when active.

The FIO4 can be used in all SeaCom exchange systems, and can act as the backplane bus master, just as the AEXT16 can.

Trunk lines

Trunks lines are use to connect satellite terminals, GSM phones and landlines enabling the system to make calls out from the ship to other telephones worldwide.
The FIO4 implements 2 or 4 such telephone channels on one single board.
The 2 wire trunk line is compatible with more or less every Satellite terminal like Sailor Iridium, Sailor Fleet Broadband etc. These systems have two fax and PABX interfaces, which connects directly to the FIO4 using 2 wires only.

Audio I/O

The FIO4 card has two audio in / out lines. These are used to connect external public address amplifiers and to connect any audio source that should be callable as an example the VHF radio etc. Also music can be input for music when free distribution.
The two audio channels are truly bidirectional 600 ohm isolated ports.
For each of the audio channel, a n.o. relay contact is provided. This relay is activated on call to the line or on PA calls to the line.
An each of the line has an digital input, which can be used to make the channel imitate a telephone call to predefined call numbers.

Relays

Two general purpose n.o. relay contacts are available. These relays can be activated on calls, on PA calls, and on calls and key press.

Zone relay drives

8 relay drive outputs are found. These are to be used with the Zone Relay Unit (ZRU). Each relay can be activated by a telephone call, a PA call and on calls and key press.

Technical Data

- 2 or 4 2 wire analogue trunk lines
- 2 audio in/out channels
- 2 relays associated audio
- 2 general purpose relays (the 4 line only)
- 8 zone relay drive output (the 4 line only)

Trunk lines:

- 2 wire analogue
- Line feed detection
- Ringing detection
- DTMF receiver
- DTMF transmitter
- Call progress tone detector
- Galvanic isolated 1,5kV

Audio I/O:

- 600 ohm bidirectional
- -0 dBm line level
- Galvanic isolated 1,5kV
- Relay for activating PA amplifier
- Digital input for external activation

General purpose relay:

- 24V
- 500mA

Zone relay drive:

- 24V
- 0V inactive 24V active
- 50mA relay drive
- 24V 500mA

Connectors

J7, 19 and J12 are the front connectors where trunk lines, audio and relays are connected.
The picture below shows the layout, an the following tables also apply.

J7 Trunk and audio:

Pins	FIO4	FIO4-2
1 and 2	Trunk line 1	Trunk line 1
3 and 4	Trunk line 2	Trunk line 2
5 and 6	Trunk line 3	Not used
7 and 8	Trunk line 4	Not used
9 and 10	Audio I/O 1	Audio I/O 1
11 and 12	Audio I/O 2	Audio I/O 2
13 and 14	Audio relay 1	Audio relay 1
15 and 16	Audio relay 2	Audio relay 2

J9 Trunk and audio:

Pins	FIO4	FIO4-2
1 and 2	Audio I/O 1	Not used
3 and 4	Audio I/O 2	Not used
5 and 6	Audio relay 1	Not used
7 and 8	Audio relay 2	Not used
9 and 10	GP Relay 1	Not used
11 and 12	GP Relay 2	Not used
13 and 14	Digital Input 1	Not used
15 and 16	Digital Input 2	Not used

J12 Trunk and audio:

Pins	FIO4	FIO4-2
2	Zone drive 1	Not used
4	Zone drive 2	Not used
6	Zone drive 3	Not used
8	Zone drive 4	Not used
10	Zone drive 5	Not used
12	Zone drive 6	Not used
14	Zone drive 7	Not used
16	Zone drive 8	Not used
1 and 2	+24V DC	
13 and 15	0V DC	

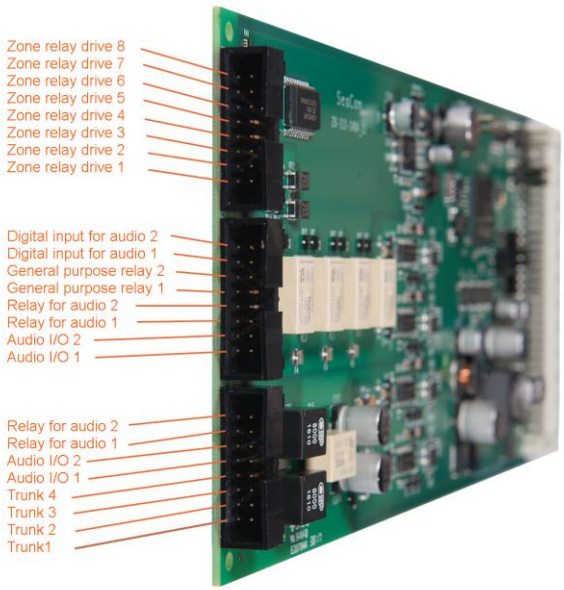

Indicators

On the backside of the FIO4, just below the 3 line connectors, the line activity indicators are found. These are yellow LEDs that will show activity on the line. Indicators are arranged so that they are aligned with the two pins of the connector which they shows the activity off. This to make debugging an installation easy.

The following code for the indicator:

- off	Line is idle
- flash 1 Hz	Wait for B answer
- flash 2 Hz	Dialing
- flash 4 Hz	Extension is ringing
- on	In conversation

Jumpers

Jumpers are only used when the FIO4 shall operate as the master in a system.

One, and only one, board of a SeaCom system must behave like a master board. The master board is responsible for generating the necessary clock signals on the backplane, and as being the center of all inter-board communication, including the communication the CP/LSP and PSU2.

A master board must be located in slot 0, and it must have J11 jumpers and J3 jumpers set correctly

On the board there is a set of jumper fields used to define the operation of the board.

J11 Master functions:

1,2 (red dot)	Master
3,4	C2,C4
4,5	PSU2

1,2 must be set for the board to be master. Setting this jumper powers on the board as the first board in the system upon power on.

3,4 must be set if an FIO2 board is to be used. This jumper enables the full C2, C4 clock system used by the FIO2.

4,5 must be set if the system is powered by a PSU2 board. This will be the case for SeaCom 1000, 2100 and 19'' systems, but for the SeaCom 3000 this jumper should be left off.

J3 CP/LSP communication:

1,2 (red dot) 3,4	0-5V level Used with LSP
5,6 7,8	RS232 level Used with CP2

These jumpers are always used in sets of two. Either 1,2 and 3,4 are set or 5,6 and 7,8 are set.

Setting 1,2 and 3,4 enables master communication between the AEXT16 master card and the LSP using 0/3V3 logic level.

Setting 5,6 and 7,8 enables master communication between the AEXT16 master card and the CP2 using RS232 logic level.

Order information

The FIO4 comes in 2 variants: 2 and 4 lines. The below stock numbers applies:

FIO4-2	10-110-1402
FIO4	10-110-1404
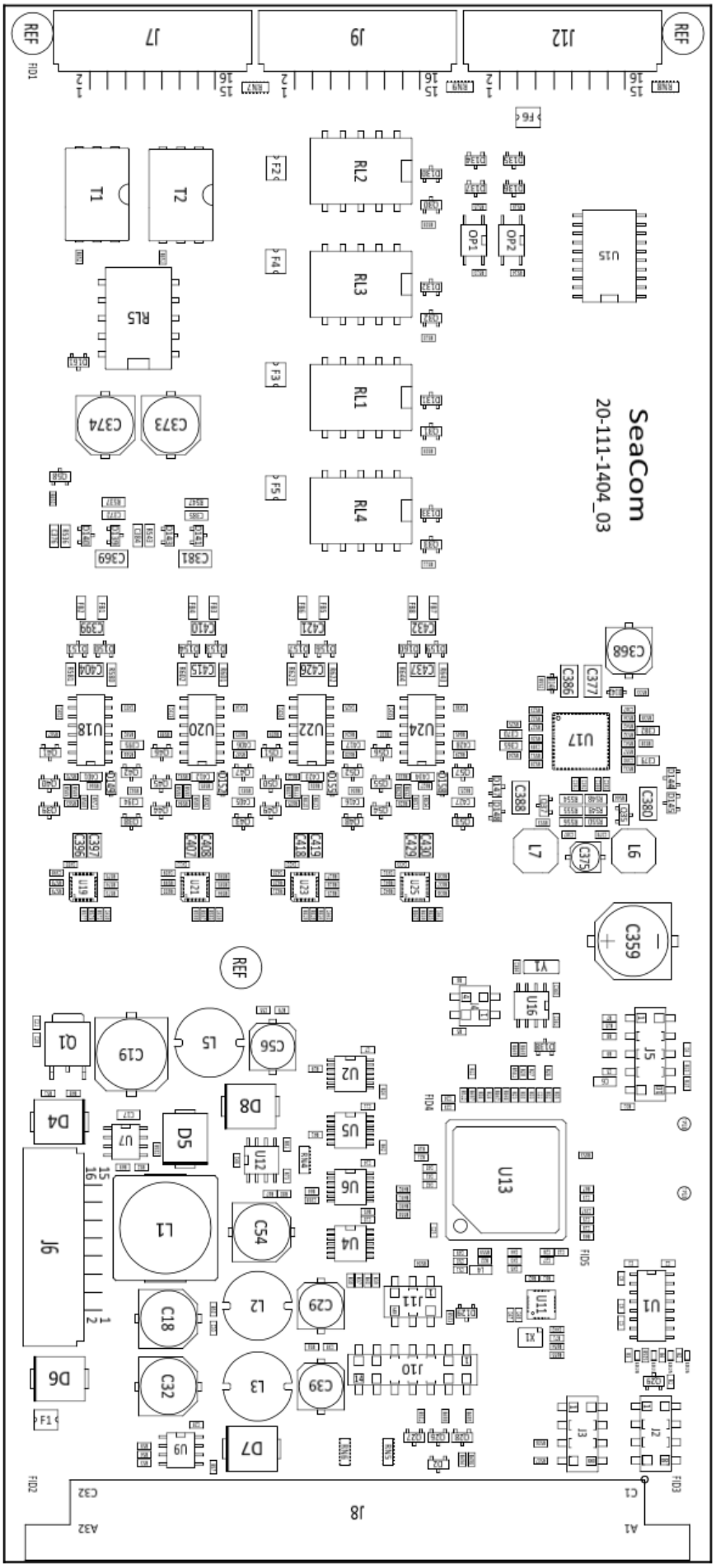
Layout